3.5" Bleed

3" Safe Clearance / Visible Pole Pocket

Large Format Expandable Banner Stand (Jumbo Tubing) 42" x 96"

Item #: CSTANJN6B
& CSTANJN6S

103" File Height

3" Safe Clearance

1/2" Bleed

Safety Area for
Text and Logos:

36" x 90"

File Dimensions:

43" x 103"

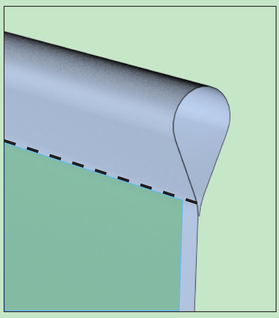

3" Safe Clearance

1/2" Bleed

File Specs:
- CMYK
- 100-150 DPI @ Final Size
- Convert all fonts to outlines
- Provide all linked files
- Provide any critical PMS colors
- 1/2" Bleed on Left and Right edge
- 3.5" Bleed on Top and Bottom edge
- Extend background to full bleed

43" File Width

3" Safe Clearance / Visible Pole Pocket

File Version: 1

3.5" Bleed

3.5″ Bleed

3″ Safe Clearance / Visible Pole Pocket

Large Format Expandable Banner Stand (Jumbo Tubing) 96″ x 96″

Item #: CSTANJN5B
& CSTANJN5S

Safety Area for
Text and Logos:

90″ x 90″

File Dimensions:

97″ x 103″

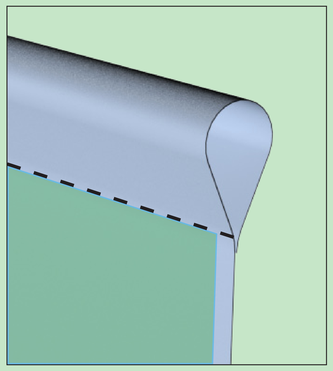

File Specs:
- CMYK
- 100-150 DPI @ Final Size
- Convert all fonts to outlines
- Provide all linked files
- Provide any critical PMS colors
- 1/2″ Bleed on Left and Right edge
- 3.5″ Bleed on Top and Bottom edge
- Extend background to full bleed

103″ File Height

97″ File Width

3″ Safe Clearance

1/2″ Bleed

3″ Safe Clearance

1/2″ Bleed

3″ Safe Clearance / Visible Pole Pocket

File Version: 1

3.5″ Bleed

3.5" Bleed

2" wide notch for center upright

3" Safe Clearance / Visible Pole Pocket

Large Format Expandable Banner Stand (Jumbo Tubing) with 10' Conversion Kit 120" x 120"

Item #: CSTANJN5B with CSTANJN5C1B
& CSTANJN5S with CSTANJN5C1S

Safety Area for
Text and Logos:

114" x 114"

File Dimensions:

121" x 127"

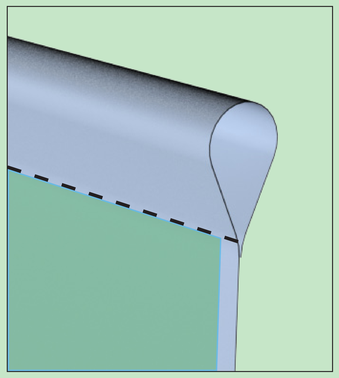

File Specs:

- CMYK
- 100-150 DPI @ Final Size
- Convert all fonts to outlines
- Provide all linked files
- Provide any critical PMS colors
- 1/2" Bleed on Left and Right edge
- 3.5" Bleed on Top and Bottom edge
- Extend background to full bleed

3" Safe Clearance

1/2" Bleed

127" File Height

3" Safe Clearance

1/2" Bleed

121" File Width

3" Safe Clearance / Visible Pole Pocket

File Version: 1

3.5" Bleed

2" wide notch for center upright

3.5″ Bleed

2″ wide notch for center upright

3″ Safe Clearance / Visible Pole Pocket

Large Format Expandable Banner Stand (Jumbo Tubing) with 12' Conversion Kit 144″ x 144″

Item #: CSTANJN5B with CSTANJN5C2B
& CSTANJN5S with CSTANJN5C2S

Safety Area for
Text and Logos:

138″ x 138″

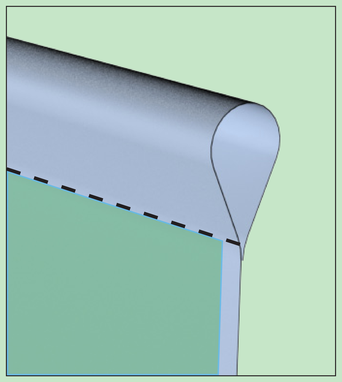

File Dimensions:

145″ x 151″

File Specs:

- CMYK
- 100-150 DPI @ Final Size
- Convert all fonts to outlines
- Provide all linked files
- Provide any critical PMS colors
- 1/2″ Bleed on Left and Right edge
- 3.5″ Bleed on Top and Bottom edge
- Extend background to full bleed

151″ File Height

3″ Safe Clearance

3″ Safe Clearance

145″ File Width

3″ Safe Clearance / Visible Pole Pocket

File Version: 1

3.5″ Bleed

2″ wide notch for center upright